THE CONTRACTOR SHALL VERIFY AND BE RESPONSIBLE FOR ALL DIMENSIONS. DO NOT SCALE THE DRAWING - ANY ERRORS OR OMISSIONS SHALL BE REPORTED TO STANTEC WITHOUT DELAY.
THE COPYRIGHTS TO ALL DESIGNS AND DRAWINGS ARE THE PROPERTY OF STANTEC. REPRODUCTION OR USE FOR ANY PURPOSE OTHER THAN THAT AUTHORIZED BY STANTEC IS FORBIDDEN.

32' ROAD WIDTH
(PARKING ON BOTH SIDES)

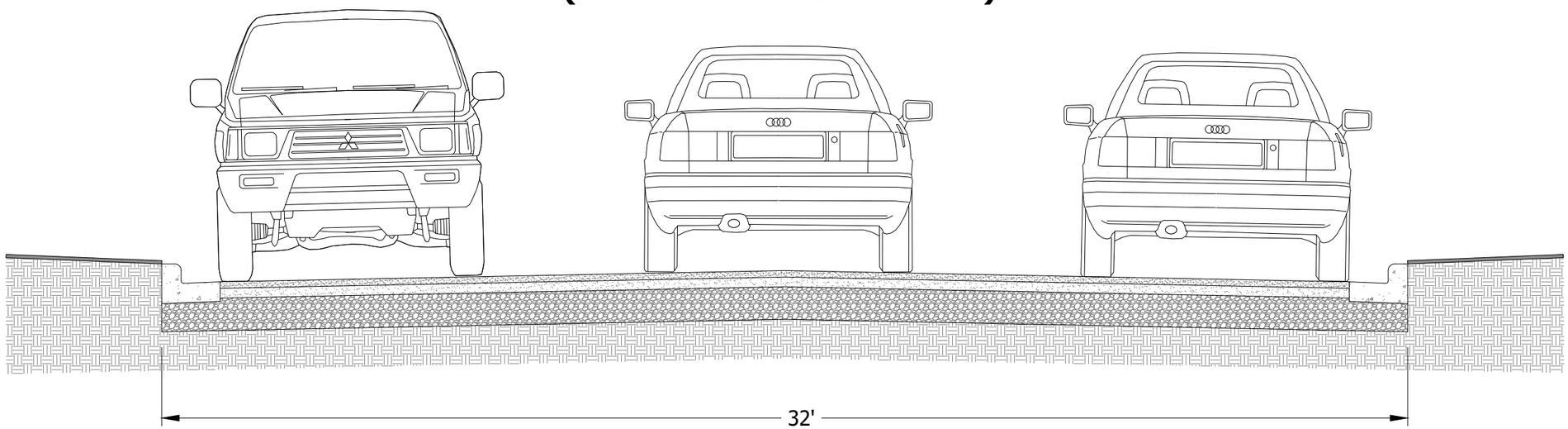

EXISTING 35' ROAD WIDTH
(PARKING ON BOTH SIDES)

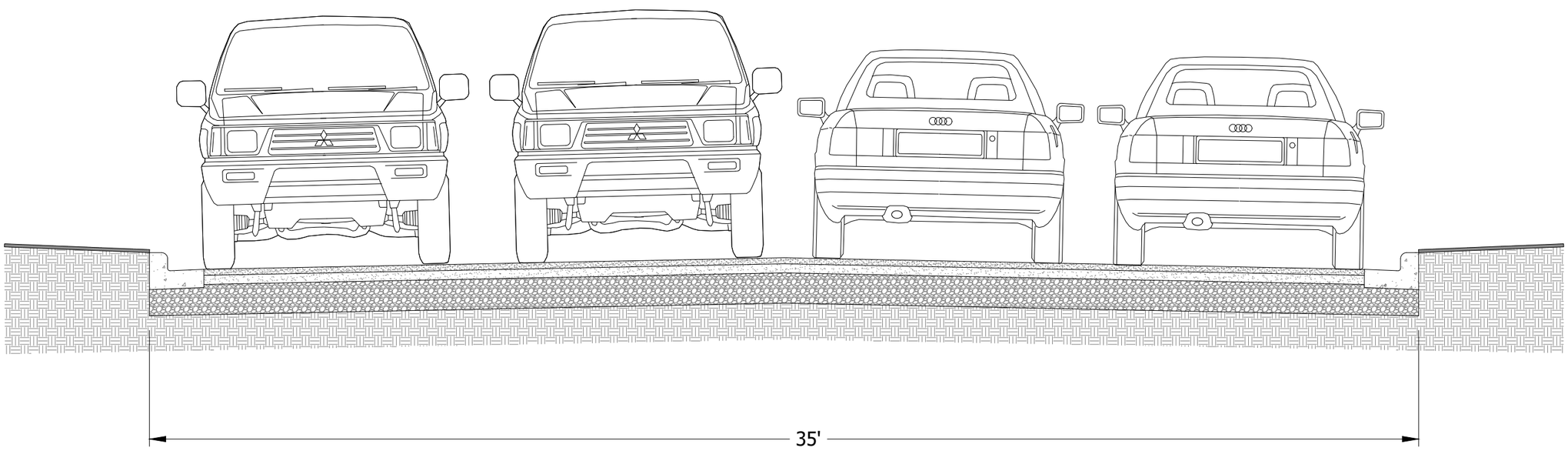

Stantec
12075 N. Corporate Parkway, Suite 200
Mequon, WI 53092
www.stantec.com

STREET WIDTH EXHIBIT

SOUTHEAST NEIGHBORHOOD UTILITY RECONSTRUCTION
VILLAGE OF JOHNSON CREEK
JOHNSON CREEK WI, JEFFERSON COUNTY

DATE OF ISSUANCE
ISSUE DATE

NO	REVISION	DATE

SURVEY	CHAPUT
DRAWN	CMM
DESIGNED	CMM
CHECKED	KK
APPROVED	
PROJ. NO.	193805861

SHEET NUMBER
C7.03

Plot Date: 08/14/2020 - 9:49am
Drawing name: C:\Users\cmoring\Desktop\193805861_CAD_DWG\DWG\SHEETS\193805861_C700.dwg
Xrefs: 193805861_TB-34x22